VOR RWY 13

SMITH FLD (SMD)

VOR OLK	APP CRS	Rwy ldg	2623
110.4	114°	TDZE	836
		Apt Elev	836

T
NA
-22°C

Rwy 13 helicopter visibility reduction below 1 SM NA. Procedure NA at night. When local altimeter setting not received, use Fort Wayne Intl altimeter setting and increase all MDA 40 feet and S-13 Cat C visibility ⅛ SM.

MISSED APPROACH: Climb to 1900 then climbing left turn to 2700 direct OLK VOR and hold.

AWOS-3	FORT WAYNE APP CON	UNICOM
124.55	127.2 284.6	122.8 (CTAF) L

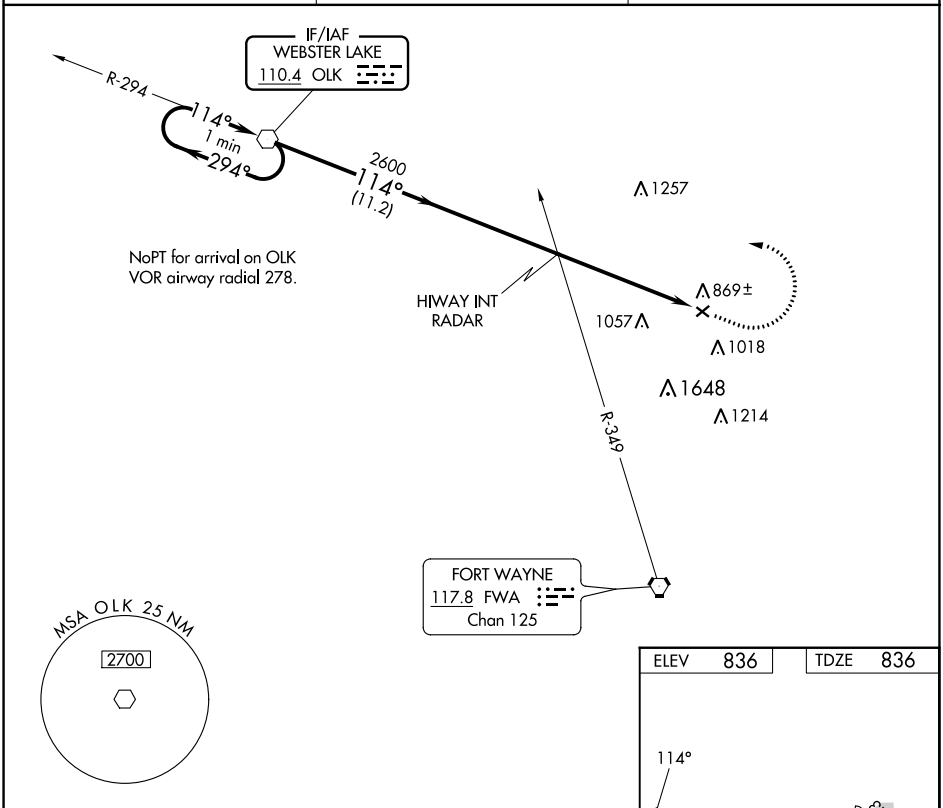

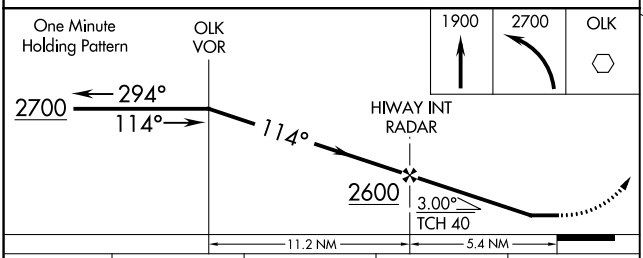

CATEGORY	A	B	C	D
S-13	1360-1 524 (600-1)		1360-1½ 524 (600-1½)	NA
C CIRCLING	1400-1 564 (600-1)		1940-3 1104 (1200-3)	NA

ELEV	836	TDZE	836

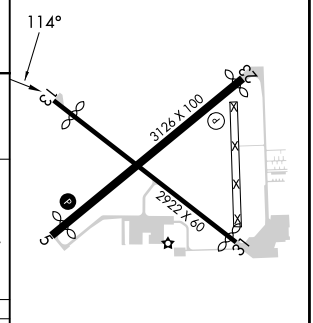

MIRL Rwys 5-23 and 13-31 L

FAF to MAP 5.4 NM					
Knots	60	90	120	150	180
Min:Sec	5:24	3:36	2:42	2:10	1:48

EC-2, 16 MAY 2024 to 13 JUN 2024
EC-2, 16 MAY 2024 to 13 JUN 2024